Cassette awning

markilux 5010

The trendy cassette awning – slim, strong and simply chic.

markilux.com

markilux
safe timeless beautiful

01 02 03 04 05 **06** 07 08 09 10 11 12 13 14 15 16 17

Product characteristics

Wind resistance class 2
Beaufort 5 → 7.5–10.4 m/s → 28–37 km/h → 17–23 mph

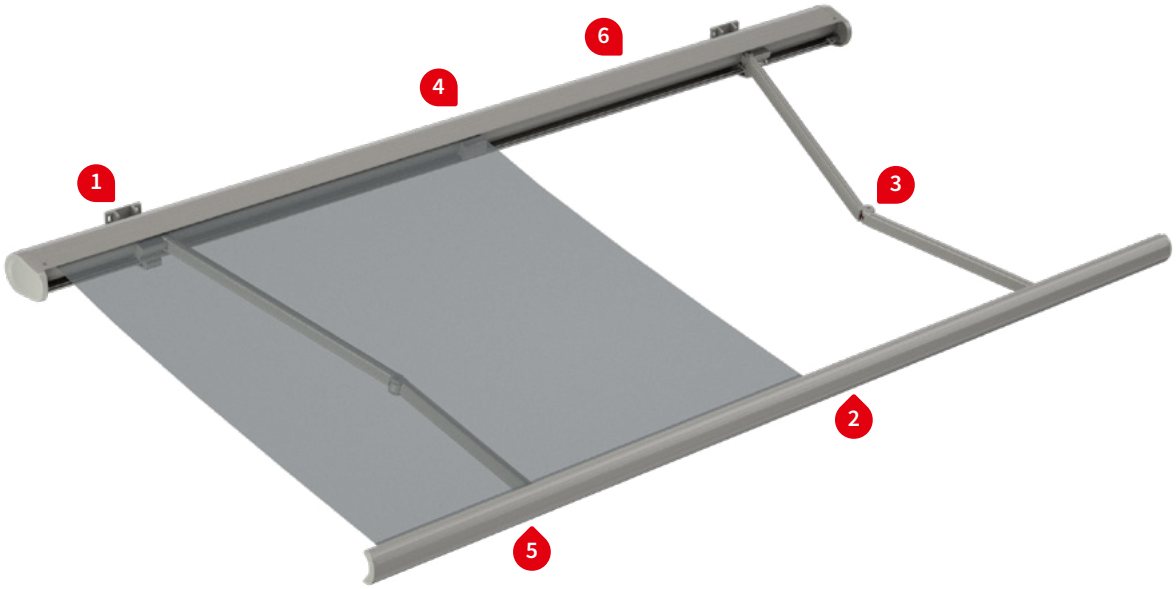

1 face fixture

1 top fixture

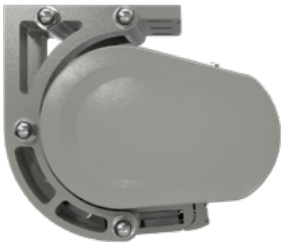

2 drop valance [1)]

2 drop valance, during extension[1)]

3 twin steel-link chains, corrosion protected

3 bionic tendon made of high-tech fibres for optimum power transference [1)]

4 infrared heater attached to the cassette [1)]

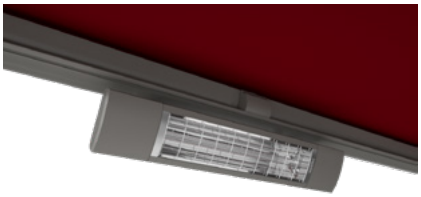

5 arm connection to the front profile, decorative cap in polished chrome

6 wall sealing profile [1)], front profile end cap in polished chrome

1) optional configuration

Product characteristics

Description

- ovally shaped cassette awning in a slender design
- extremely robust construction, ideally suited for shading large areas

Special features

- option of a drop valance up to a projection of 300 cm – vertical protection against low-lying sun and inquisitive glances integrated into the front profile, can be operated manually
- option of a silentec motor – motor noise is appreciably reduced
- the awning frame colour and end cap options can be freely combined (front profile end caps, decorative caps at the elbow joint and for the front profile connectors)

Dimensions

- cassette in the standard version: depth 218 mm, height 151 mm
  cassette with drop valance: depth 293 mm, height 151 mm (without brackets)
- single unit: minimum width 187 cm at the smallest projection of 150 cm
  maximum width 700 cm at the largest projection of 400 cm
- also available as a coupled unit

Roller tube and lateral bearings

- round roller tube Ø 85 mm with keyway, galvanised steel – excellent stability ensures near perfect cover performance even at the largest widths
- the cassette side caps are made of die-cast aluminium, powder coated

Awning profiles

- extruded aluminium, in façade quality, powder coated
- cassette in two parts with integrated cover profile – offering optimum protection of the awning cover against the weather
- semi-circular front profile with integrated gutter

Folding arms

- profiles in extruded aluminium, in façade quality, powder coated
- moving parts made of drop-forged aluminium – the arms are therefore extremely fracture resistant
- pivot bolts in stainless steel run in Teflon-coated bronze bushes – practically maintenance free, virtually silent and extremely hard-wearing
- power transference via corrosion-protected twin steel-link chains at the elbow joint, optionally with innovative bionic tendon made of high tensile, high-tech fibres – low in friction, noiseless, insensitive to corrosion and UV resistant

Side caps

- the front profile end caps are made of high-quality plastic, powder coated or with a polished chrome finish, with water drainage holes
- the decorative caps for the arm to front profile connectors are made of high-quality plastic, powder coated or with a polished chrome finish
- the decorative caps at the elbow joint are made of high-quality plastic, in black or white (depending on the awning colour) or with a polished chrome finish

Fixture brackets

- face fixture, top fixture, eaves fixture, bottom fixture
- extruded aluminium, powder coated
- pitch range 5°–35° or 36°–70°, infinitely adjustable
- spacer plates, stand-off brackets and other accessories are available

Frame and end cap colours

markilux frame colours without surcharge

traffic white RAL 9016

metallic aluminium RAL 9006

grey brown, similar to RAL 8019

off-white textured finish, 5233 [1)]

stone grey metallic, 5215 [1)]

anthracite metallic, 5204 [1)]

Havana brown textured finish, 5229 [1)]

off-white textured finish 5233 [1)]
front profile end cap in polished chrome

stone grey metallic 5215 [1)]
front profile end cap in polished chrome

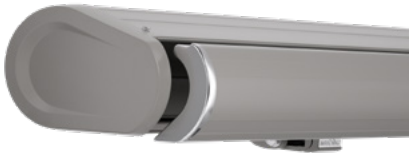

anthracite metallic, 5204 [1)]
front profile end cap in polished chrome

Combination options – possible in any frame colour

Non-standard powder-coated finish

Bespoke frame colours at a surcharge – matt, metallic and pearl finishes as well as other colour ranges (DB, Tiger, etc.) on request. All frame colours are available at a surcharge with enhanced corrosion protection.

1) textured finish

Colours may differ slightly from those depicted in both hue and finish.

Dimensions and configuration options

Single unit

Order dimensions		Overall awning width 250 (187 – 250)	300 (251 – 300)	350 (301 – 350)	400 (351 – 400)	450 (401 – 450)	500 (451 – 500)	550 (501 – 550)	600 (551 – 600)	650 (601 – 650)	700 [2] (651 – 700)	Minimum width: Motor			Crank handle	
H	150	[3]										200	187	—	200	187
	200	[3]										250	237	—	250	237
	250	—	[3]									300	287	—	300	287
	300	—	—	[3]					[1]			350	337	—	350	337
	350 [1]	—	—	—	[3]					[2]		400	387	644	400	387
	400 [1] [2]	—	—	—	—	[3]			—	—		450	437	694	—	—

dimensions in cm

1) = drop valance not available
2) = only available with motor drive (at surcharge)!
3) = observe the minimum widths!
H = projection

= 2 folding arms, 2 brackets
= 2 folding arms, 3 brackets
= 2 folding arms, 3 brackets, 1 rolltex bearing
= 3 folding arms, 4 brackets, 2 rolltex bearings

= 2 standard arms
= 2 bespoke arms (surcharge)
= 3 standard arms

Operation	standard	optional
crank handle	✓	—
spring-assisted crank handle	—	✓
hard-wired motor	—	✓
silentec motor (optionally with an external io / RTS receiver) [1]	—	✓
radio-controlled motor io, 868 MHz	—	✓
radio-controlled motor RTS, 433 MHz	—	✓
radio-controlled motor RTS, 433 MHz with manual override [1]	—	✓

1) for awnings with a maximum of 2 arms

Coupled awning (only with motor drive) [1]
2 fields, 1 motor, maximum width 1390 cm
3 fields, 1 motor, maximum width 1800 cm
maximum projection (depending on the width) 400 cm
junction roller
optionally with a one-piece cover (maximum of 2 fields / projection 350 cm / 15° pitch – without internal cover profile, drop valance not available)

1) N.B! Important background information can be found in the chapter "General Information", in the section "Coupled Awnings".

Awning cover	fabric range no.	standard	optional
sunvas	301.. / 309..–315..	✓	—
perla	370 ..	—	✓
sunsilk	324.. / 325.. / 328.. / 369..	✓	—
perla FR	374.. / 375..	—	✓
perfotex	331.. / 332..	—	—
transolair	338..	—	—
vuscreen Alu	317..	—	—
Soltis Perform 92	92-20..	—	—
glass fibre screen	272..	—	—
valance, height 20 cm		—	✓

Drop valance [1] [2]	standard	optional
height 210 cm		
maximum awning projection 300 cm [3]		
winding handle	✓	—
hard-wired motor	—	—
radio-controlled motor io, 868 MHz	—	—
radio-controlled motor RTS, 433 MHz	—	—
cover	sunvas / sunsilk / transolair / vuscreen Alu [4]	

1) in the case of coupled awnings (2 fields) the shadeplus / drop valance is driven by 2 separate gearboxes (on the outer left and right)
2) Only available in plain seamless fabrics (oversized, fabric width > 120 cm) or in plains with a horizontal joint (fabric width 120 cm).
3) not available in the sizes 551– 600 cm × 300 cm, sizes 601– 650 cm × 300 cm on request
4) vuscreen Alu: maximum drop 190 cm

01
02
03
04
05
06
07
08
09
10
11
12
13
14
15
16
17

Optional accessories

manual drop valance
folding arm technology with bionic tendon
valance
wall sealing profile (effective up to a maximum awning pitch of 65°)
infrared heater 2500 W
infrared heater 2500 W with integrated radio-controlled receiver 868 MHz io
LED spotline – light bar 110 × 70 mm with 5 W LED spotlights, width 180 cm / 3 spots or 300 cm / 5 spots
LED spotline io – light bar 110 × 70 mm with 5 W LED spotlights with integrated dimmable radio-controlled receiver, width 180 cm / 3 spots or 300 cm / 5 spots
automatic controls (light, wind, rain)

N.B! Important background information can be found in the chapter “Optional Accessories”.

Fixture brackets

face fixture bracket 150 mm, 5°–35°	77921.
face fixture bracket 150 mm, 38°–65°	77936.
spreader plate A 430 × 160 × 12 mm	75328.
spreader plate B 300 × 400 × 12 mm	75327.
stand-off bracket 80 mm–300 mm	77969.
markilux panel 250 × 230 × 49 mm	76308.
markilux panel continuous	76380.
top fixture bracket 135 mm, 5°–35°	77937.
top fixture bracket 150 mm, 38°–65°	77938.
eaves fixture bracket 150 mm, 5°–35°, 150 mm plate	77939.
eaves fixture bracket 150 mm, 5°–35°, 270 mm plate	77940.
flat plate and angled bracket for eaves fixture, machine finish aluminium, 500 mm plate	741290
spreader plate 260 × 60 × 12 mm for eaves fixture bracket	75383.
angled profile for eaves fixture 160 × 160 × 12 mm, machine finish aluminium, undrilled, by the metre (max. 3 m)	701809
bottom fixture bracket 150 mm, 5°–35°	77941.

Bracket fixture range

Awning with 2 folding arms

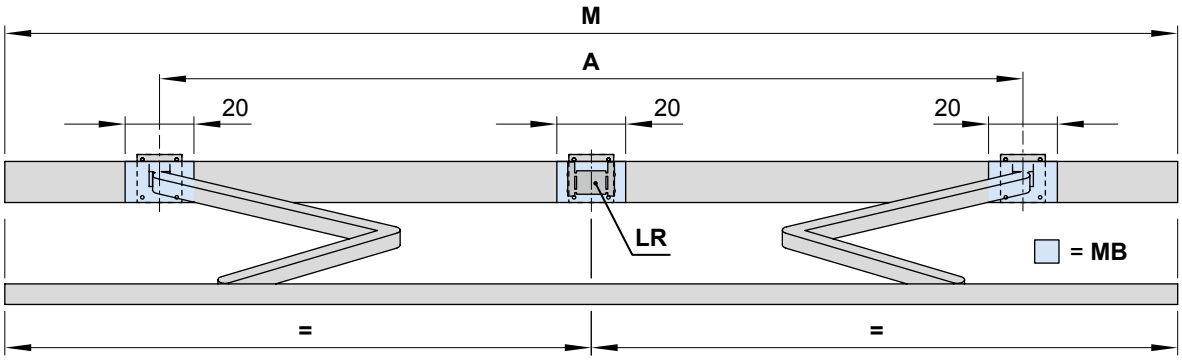

dimensions in cm

		Overall awning width								
		250	**300**	**350**	**400**	**450**	**500**	**550**	**600**	**650**
Order dimensions		187 – 250	251 – 300	301 – 350	351 – 400	401 – 450	451 – 500	501 – 550	551 – 600	601 – 650
		Arm position A								
H	**150**	172 [1]	220	270	300	340	380	440	490	510
	200	222 [2]	223 [1]	270	300	340	380	440	490	510
	250	—	272 [2]	273 [1]	300	340	390	440	490	510
	300	—	—	322 [2]	323 [1]	340	390	440	490	510
	350	—	—	—	372 [2]	373 [1]	390	440	490	—
	400	—	—	—	—	422 [2]	423 [1]	440	—	—
	BHT	**No. of brackets | No. of fixing points**								
W	**15**	2 | 8					3 | 12			
BP		**A** 2 | 16			**B** 2 | 8		**A** 2 | 16 **B** 2 | 8			
DP		—					1 | 4			
PA		2 | 8					3 | 12			
DA / DE	**13.5**	2 | 8			2 | 6		3 | 12 3 | 9			

dimensions in cm

If the brackets cannot be positioned in accordance with this table, make sure the actual dimensions are noted on the order form!

The **pull-out forces** necessary for determining the correct fixing materials necessary to meet wind resistance class 2 (Beaufort 5) can be found in the password-protected dealer area of the markilux.com website under “Pull-out Forces“.

1) = coupled awning in intermediate widths available on request with junction roller

2) = please note the minimum widths! Dimension A is only valid for standard arms! Dimension A is 13 cm smaller in the case of bespoke arms. Coupled units are not available with junction roller.

A = arm position

BHT = bracket width

BP = spreader plate A or B, to be postitioned behind the folding arm

DA = eaves fixture bracket

DE = top fixture bracket

DP = spacer plate 71644, to be positioned behind the rolltex bearing, in the case of spreader plate A or B

H = *order dimension* = projection

LR = rolltex bearing

M = *order dimension* = awning width

MB = bracket fixture range

PA = markilux panel, fixture profile, width 250 mm

W = face fixture bracket

Bracket fixture range

Awning with 3 folding arms

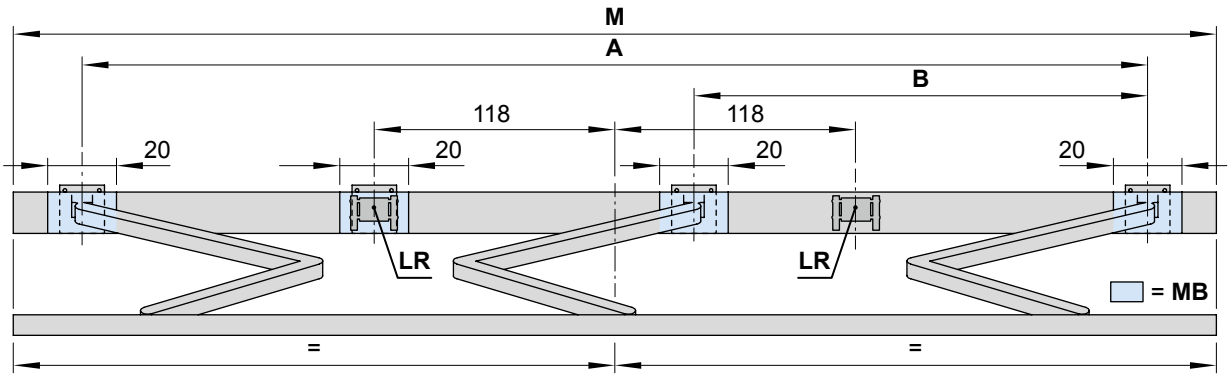

dimensions in cm

		Overall awning width									
		650		700							
Order dimensions		601 – 650		651 – 674		675 – 700		651 – 693		694 – 700	
		Arm position									
		A	B	A	B	A	B	A	B	A	B
H	150	—	—	570	265	590	265	—	—	—	—
	200	—	—	570	240	590	240	—	—	—	—
	250	—	—	570	230	590	230	—	—	—	—
	300	566 [2]	230 [2]	570	230	590	230	—	—	—	—
	350	616 [1]	225 [1]	—	—	—	—	616 [1]	225 [1]	622	230
	400	—	—	—	—	—	—	—	—	666 [1]	230 [1]

	BHT	No. of brackets | No. of fixing points	
W	15	4 | 16	
BP		**A** 3 | 24	**B** 3 | 12
DP		1 | 4	
PA		4 | 16	
DA / DE	13.5	4 | 16	4 | 12

dimensions in cm

If the brackets cannot be positioned in accordance with this table, make sure the actual dimensions are noted on the order form!

The **pull-out forces** necessary for determining the correct fixing materials necessary to meet wind resistance class 2 (Beaufort 5) can be found in the password-protected dealer area of the markilux.com website under “Pull-out Forces”.

1) = please note the minimum widths! Dimension A is only valid for standard arms! Dimension A is 13 cm smaller in the case of bespoke arms. Coupled units are not available with junction roller.
2) = awning only available with 3 folding arms if equipped with shadeplus / drop valance – available on request
A, B = arm position
BHT = bracket width
BP = spreader plate A or B,fixture position at folding arm bearing
DA = eaves fixture bracket
DE = top fixture bracket
DP = spacer plate 71644, fixture position at rolltex-bearing, if spreader plate A or B is to be used
H = *order dimension* = projection
LR = rolltex bearing
M = *order dimension* = awning width
MB = bracket fixture range
PA = markilux panel, fixture profile, width 250 mm
W = face fixture bracket

Face fixture

Fixtures, fittings and accessories

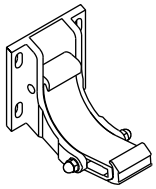

face fixture bracket

150 mm

5°–35°

77921.

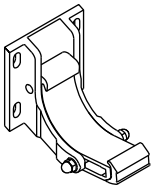

face fixture bracket

150 mm

38°–65°

77921.

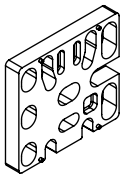

spacer plate for face fixture
150 × 136 × 20 mm

N.B! stack to a max. height of 200 mm

716331

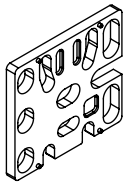

spacer plate for face fixture

150 × 136 × 12 mm

71644.

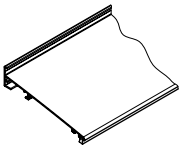

Wall sealing profile incl. brush seal when installing with a coverboard

available by the metre

76385. and 704241

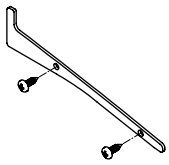

1 side plate including 2 pan-head self-tapping screws for wall sealing profile

76386. and 2 × 735611

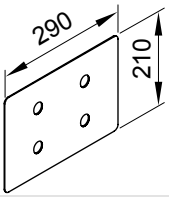

cover plate for spacer plate and stand-off brackets in the case of external insulation

290 × 210 × 2 mm

71841.

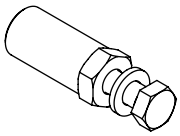

bolt reduction assembly

pack 10 pcs

M 16 → M 12	M 16 → M 10	M 12 → M 10	M 10 → M 10

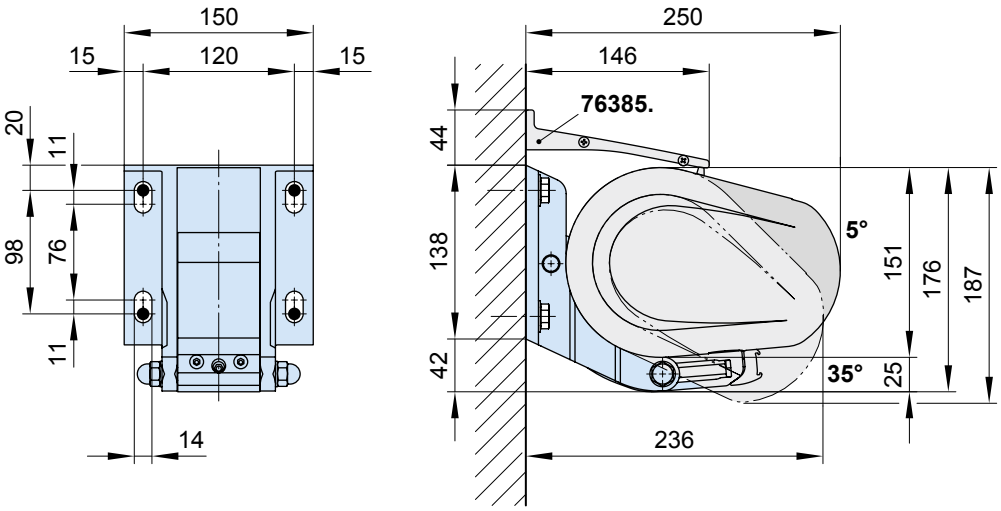

76385. = wall sealing profile (standard width = awning width (**M**); up to a maximum awning pitch of 65°)

dimensions in mm

Face fixture with spreader plate A

Fixtures, fittings and accessories

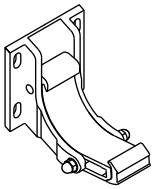

face fixture bracket

150 mm

5°–35°

77921.

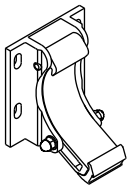

face fixture bracket

150 mm

38°–65°

77936.

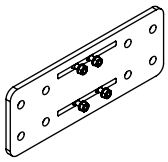

spreader plate A

430 × 160 × 12 mm

75328.

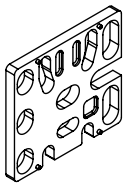

spacer plate for face fixture

150 × 136 × 12 mm

71644.

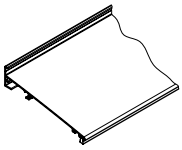

Wall sealing profile incl. brush seal when installing with a coverboard

available by the metre

76385. and 704241

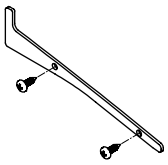

1 side plate including 2 pan-head self-tapping screws for wall sealing profile

76386. and 2 × 735611

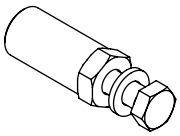

bolt reduction assembly

pack 10 pcs

M 16 → M 12	M 16 → M 10	M 12 → M 10	M 10 → M 10

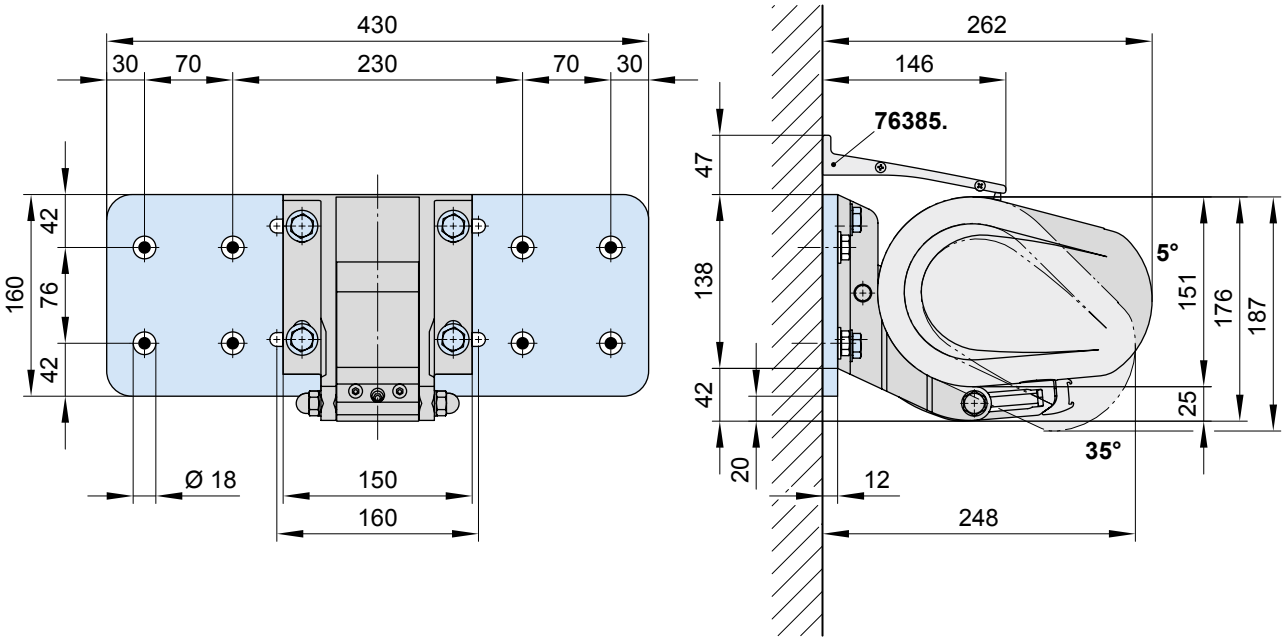

76385. = wall sealing profile (standard width = awning width (**M**); up to a maximum awning pitch of 65°)

dimensions in mm

Face fixture with spreader plate B

Fixtures, fittings and accessories

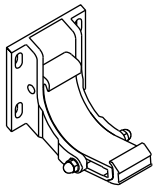

face fixture bracket

150 mm

5°–35°

77921.

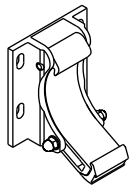

face fixture bracket

150 mm

38°–65°

77936.

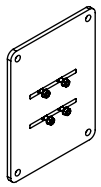

spreader plate B

300 × 400 × 12 mm

75327.

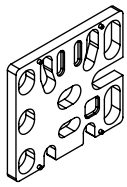

spacer plate for face fixture

150 × 136 × 12 mm

71644.

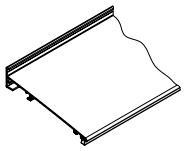

Wall sealing profile incl. brush seal when installing with a coverboard

available by the metre

76385. and 704241

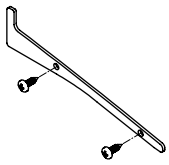

1 side plate including 2 pan-head self-tapping screws for wall sealing profile

76386. and 2 × 735611

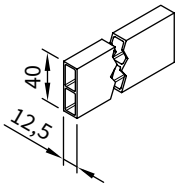

stand-off strip for wall sealing profile

available by the metre

751971

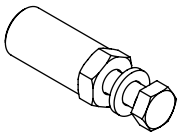

bolt reduction assembly

pack 10 pcs

M 16 → M 12 | M 16 → M 10 | M 12 → M 10 | M 10 → M 10

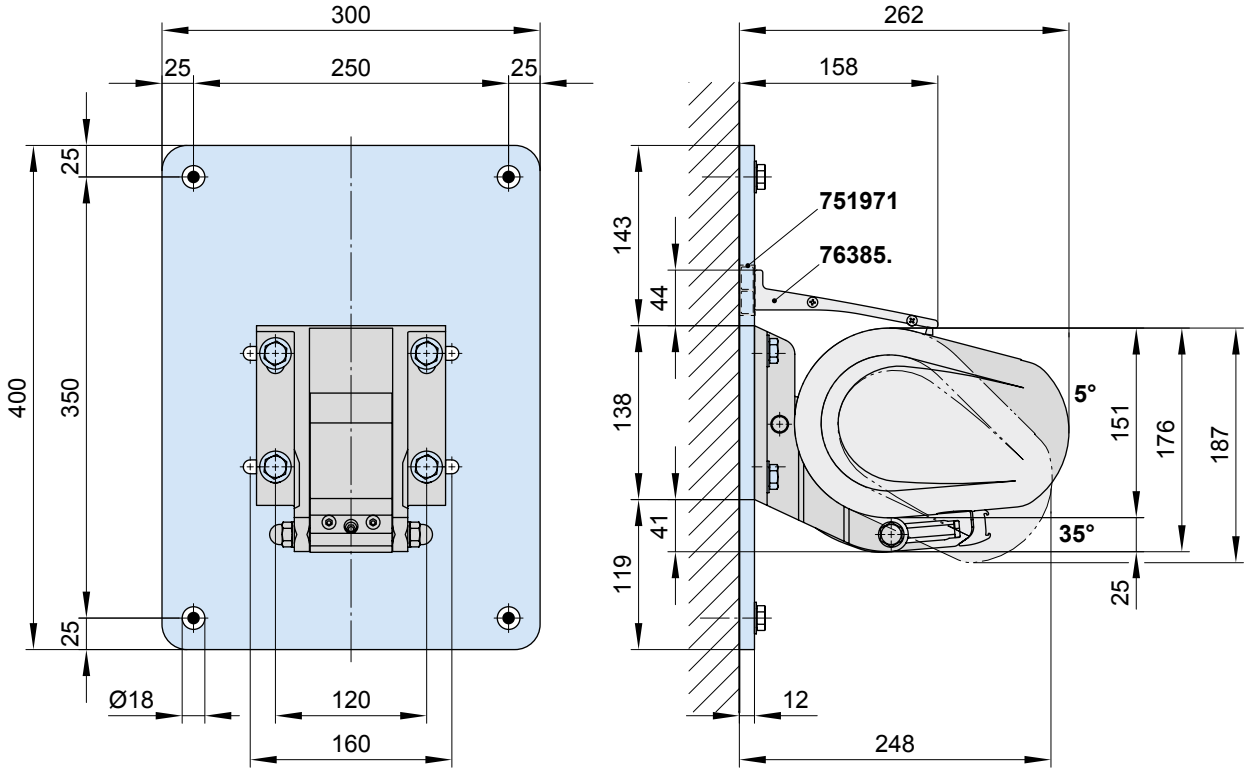

751971 = stand-off strip for wall sealing profile

76385. = wall sealing profile (standard width = awning width (**M**); up to a maximum awning pitch of 65°)

dimensions in mm

Face fixture with markilux panel 250 mm

Fixtures, fittings and accessories

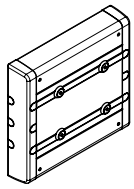

markilux panel 250 mm fixture profile

with decorative profiles and end caps

250 × 230 × 49 mm

76308.

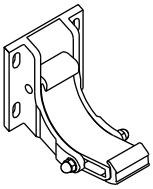

face fixture bracket

150 mm

5°–35°

77921.

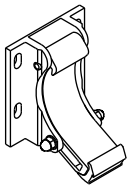

face fixture bracket

150 mm

38°–65°

77936.

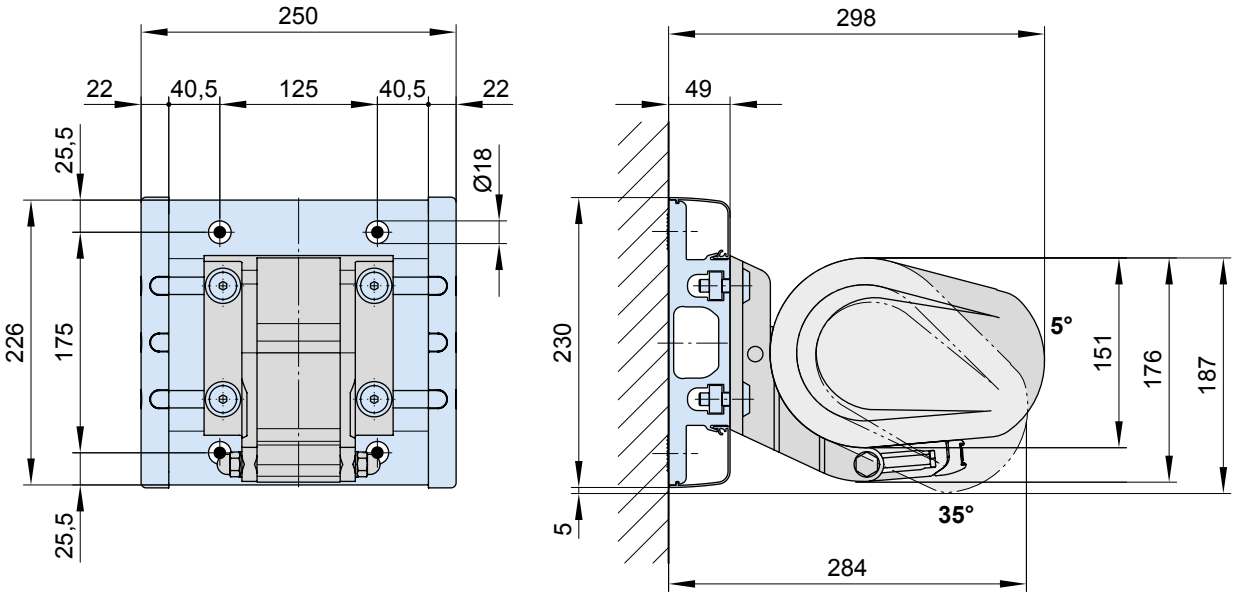

dimensions in mm

Face fixture with markilux panel durchgehend

Fixtures, fittings and accessories

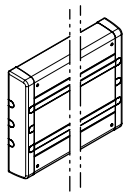

markilux panel 250 mm
fixture profile

with decorative profiles
and end caps

continuous

76380.

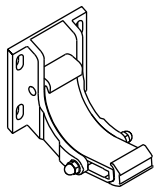

face fixture bracket

150 mm

5°–35°

77921.

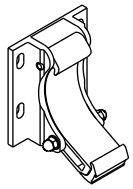

face fixture bracket

150 mm

38°–65°

77936.

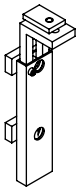

bracket
wall sealing profile

76387.

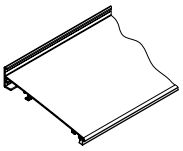

wall sealing profile
incl. brush seal
when installing with a
coverboard

available by the metre

76385. und 704241

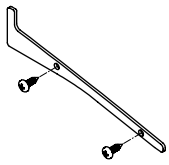

1 side plate including
2 pan-head self-tapping
screws for wall sealing
profile

76386. und 2 × 735611

As a **continuous fixture profile**, the markilux panel will always be supplied to order on the basis of a technical drawing prepared in the factory in accordance with the awning specification.

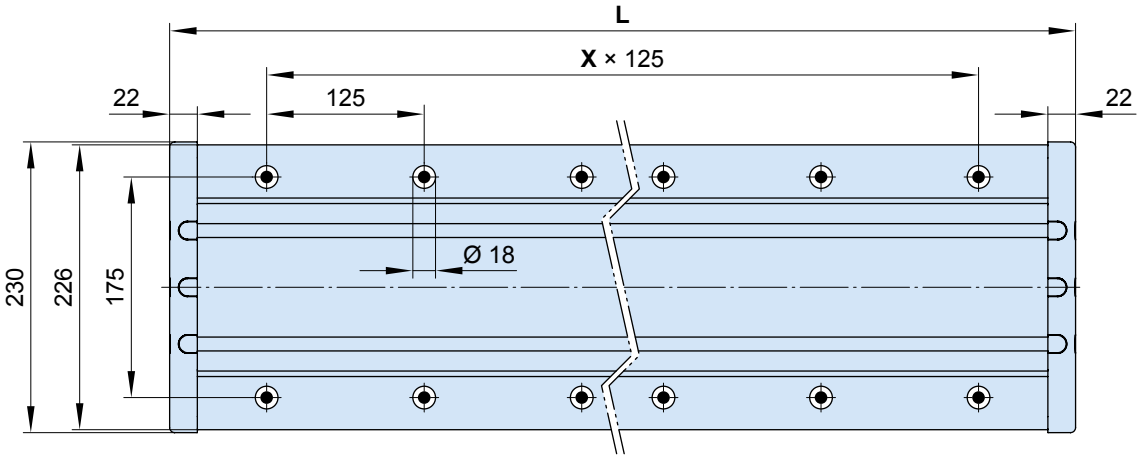

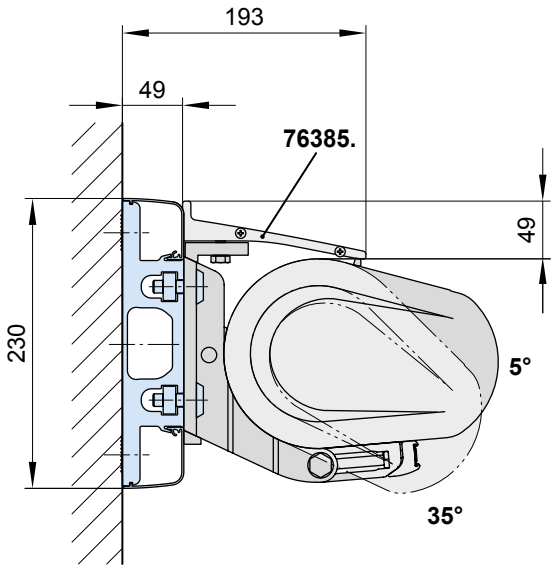

76385. = wall sealing profile (standard width = awning width (**M**); up to a maximum awning pitch of 65°)

L = individual width, max. 7000 mm (standard **L** = **M**)

X = fixing point separation, **by way of example**

dimensions in mm

Face fixture with spacer bracket

Fixtures, fittings and accessories

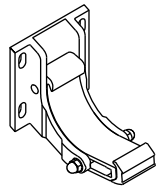

face fixture bracket

150 mm

5°–35°

77921.

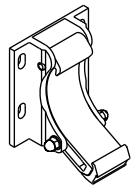

face fixture bracket

150 mm

38°–65°

77936.

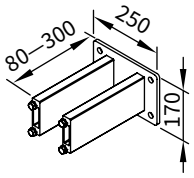

stand-off bracket
for face-fixture bracket
77921. and 77936.

77969.

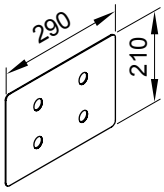

cover plate
for spacer plate
and stand-off brackets
in the case of external
insulation

290 × 210 × 2 mm

71841.

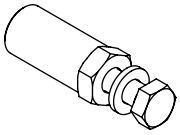

bolt reduction
assembly

pack 10 pcs

M 16 → M 12	M 16 → M 10	M 12 → M 10	M 10 → M 10

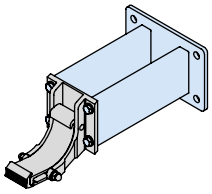

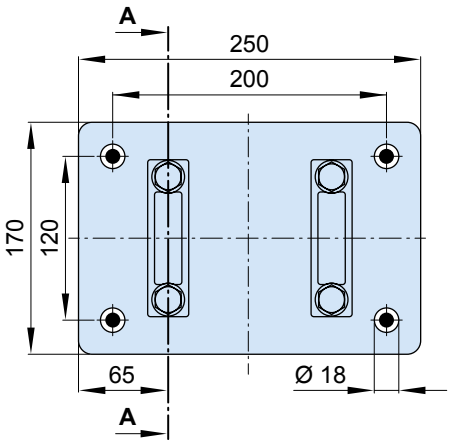

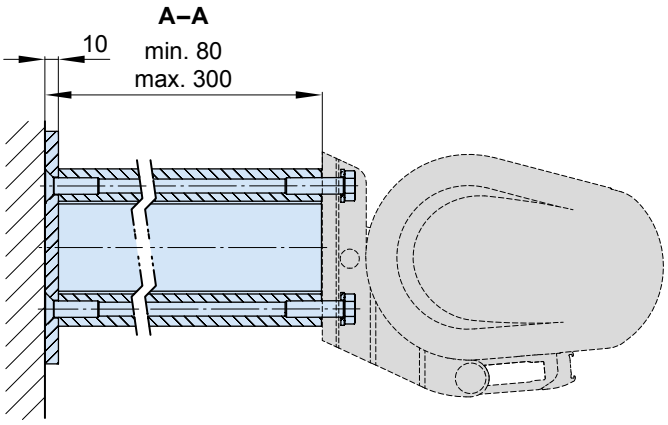

dimensions in mm

Top fixture

Fixtures, fittings and accessories

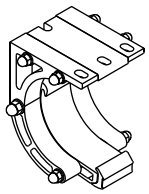

top fixture bracket

135 mm

5°–35°

77937.

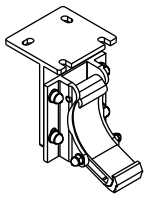

top fixture bracket

150 mm

38°–65°

77938.

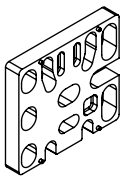

spacer plate for top fixture

150 × 136 × 20 mm

N.B! stack to a max. height of 200 mm

716331

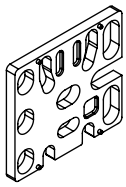

spacer plate for top fixture

150 × 136 × 12 mm

71644.

With top fixture bracket 135 mm 5°–35° (77937.)

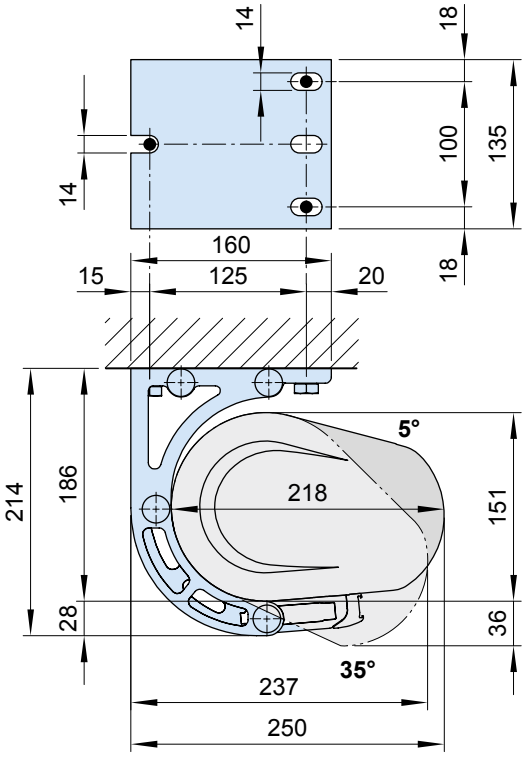

With top fixture bracket 150 mm 38° –65° (77938.)

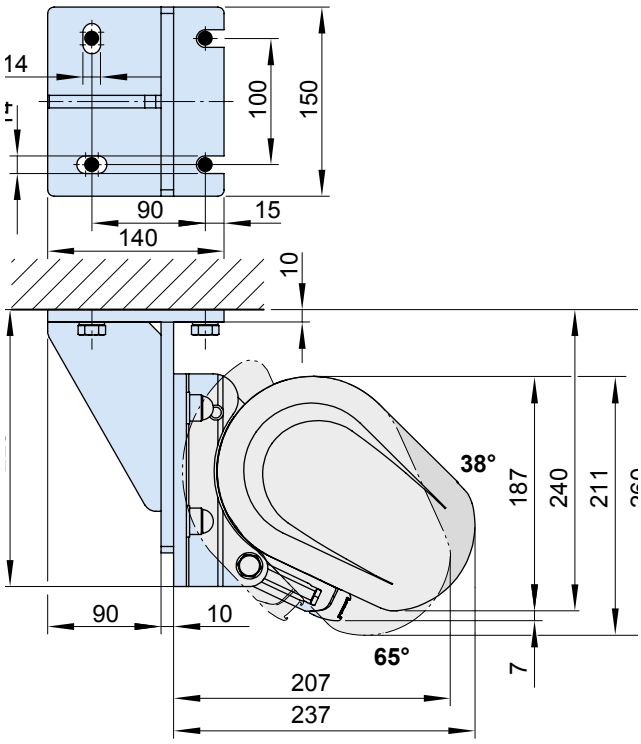

dimensions in mm

Eaves fixture

Fixtures, fittings and accessories

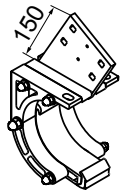

eaves fixture bracket

150 mm

5°–35°

77939.

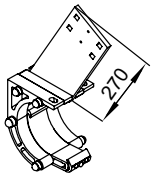

eaves fixture bracket

270 mm

5°–35°

77940.

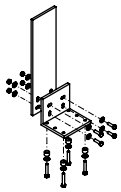

flat plate and angled bracket for eaves fixture machine finish

741290

With eaves fixture bracket, 150 mm plate (77939.)

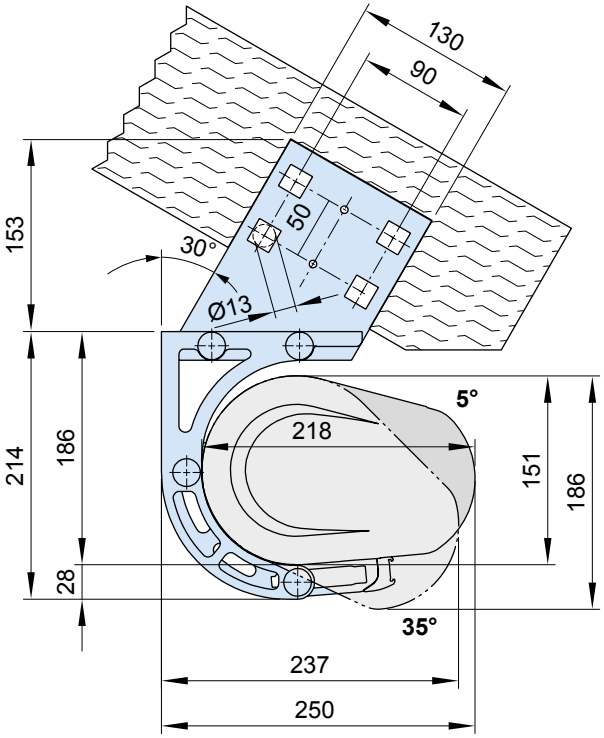

With eaves fixture bracket, 270 mm plate (77940.)

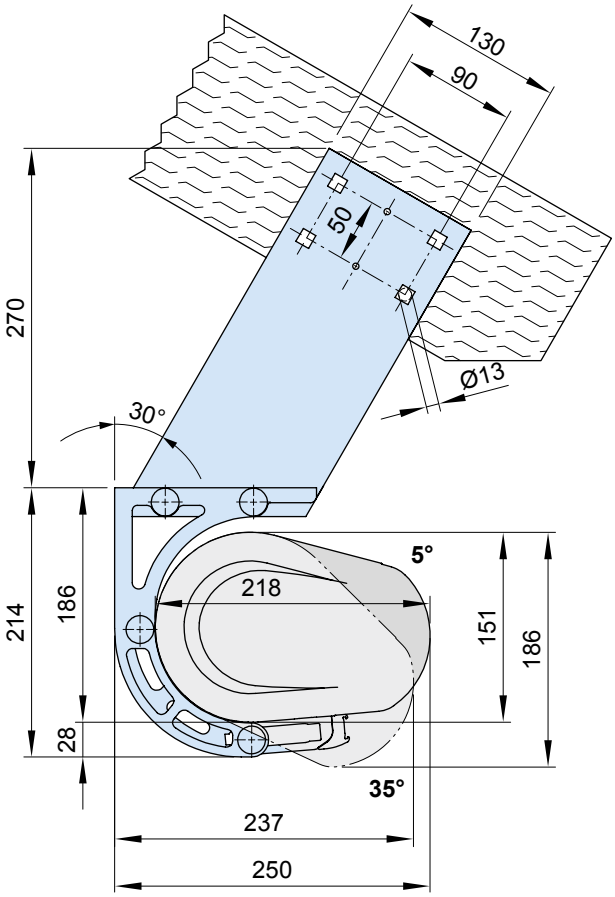

dimensions in mm

Eaves fixture with additional plate

Fixtures, fittings and accessories

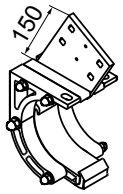

eaves fixture bracket

150 mm

5°–35°

77939.

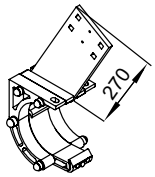

eaves fixture bracket

270 mm

5°–35°

77940.

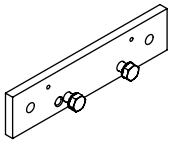

supplementary flat plate for eaves fixture

260 × 60 × 12 mm

75383.

With eaves fixture bracket, 150 mm plate (77939.)

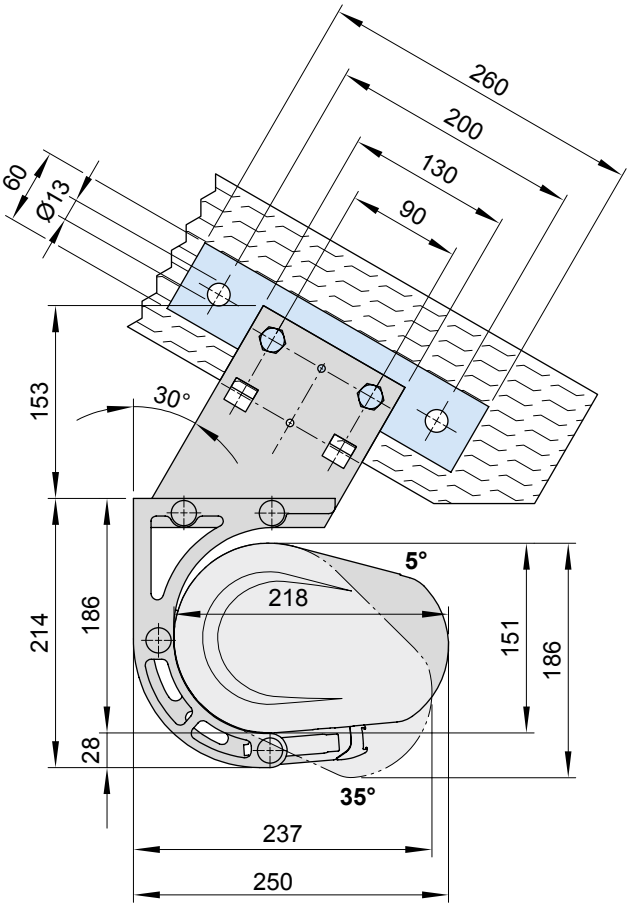

With eaves fixture bracket, 270 mm plate (77940.)

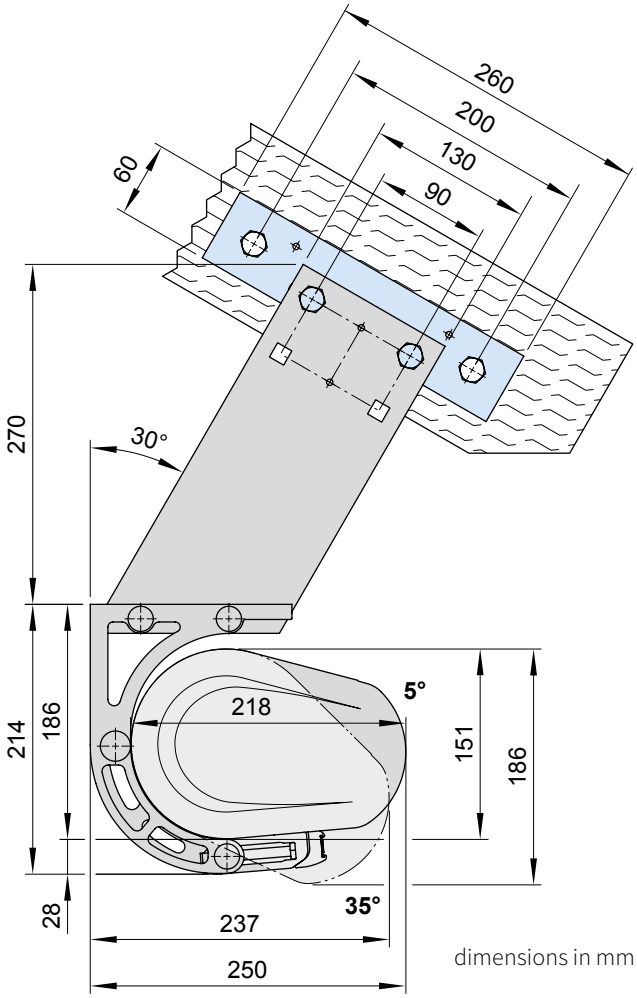

dimensions in mm

Bottom fixture

Fixtures, fittings and accessories

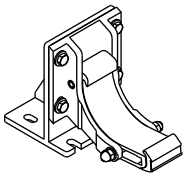

bottom fixture

5°–35°

77941.

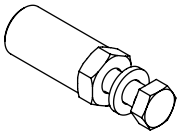

bolt reduction assembly

pack 10 pcs

M 16 → M 12 | M 16 → M 10 | M 12 → M 10 | M 10 → M 10

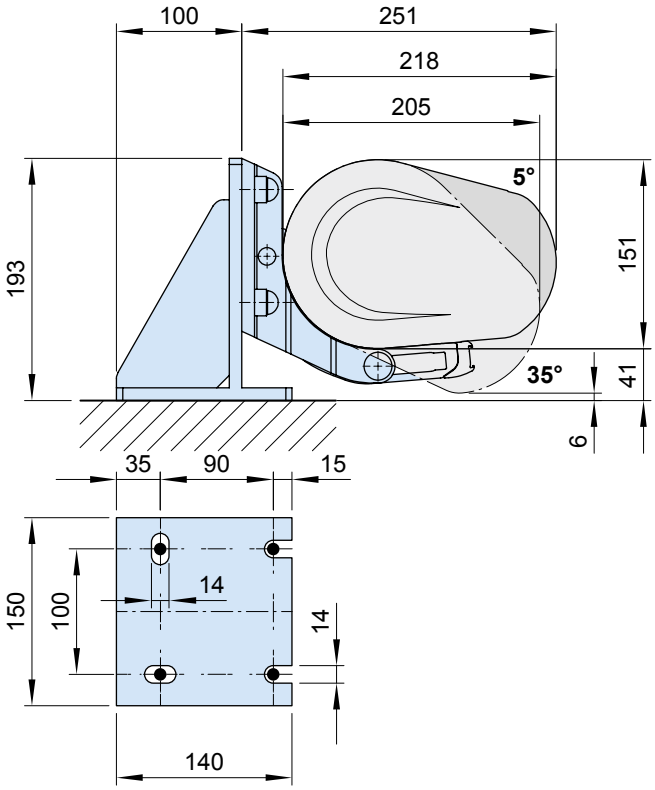

dimensions in mm

Awning with shadeplus / drop valance

Face fixture

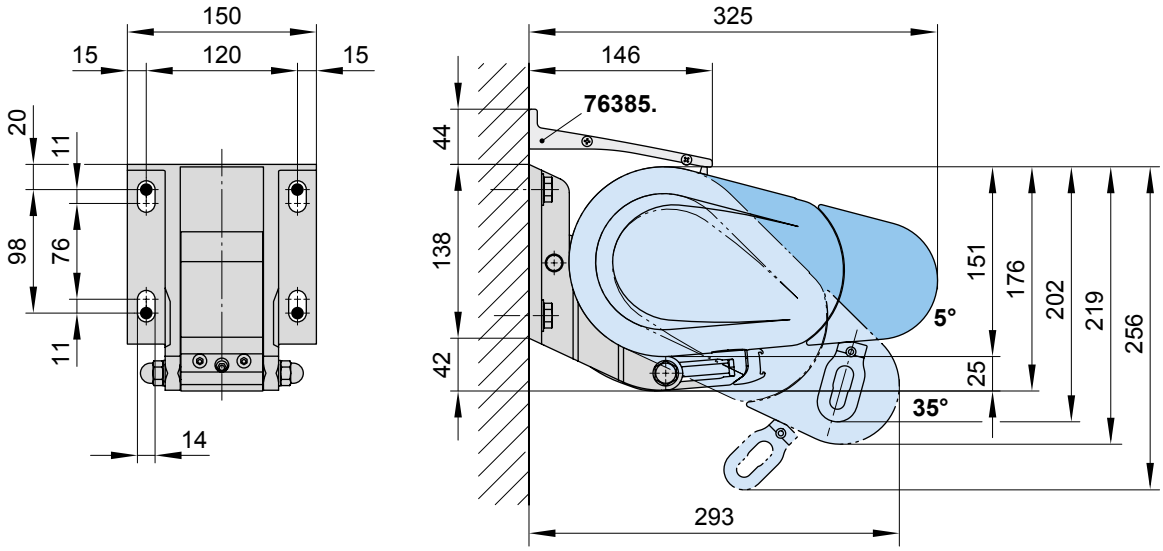

Top fixture

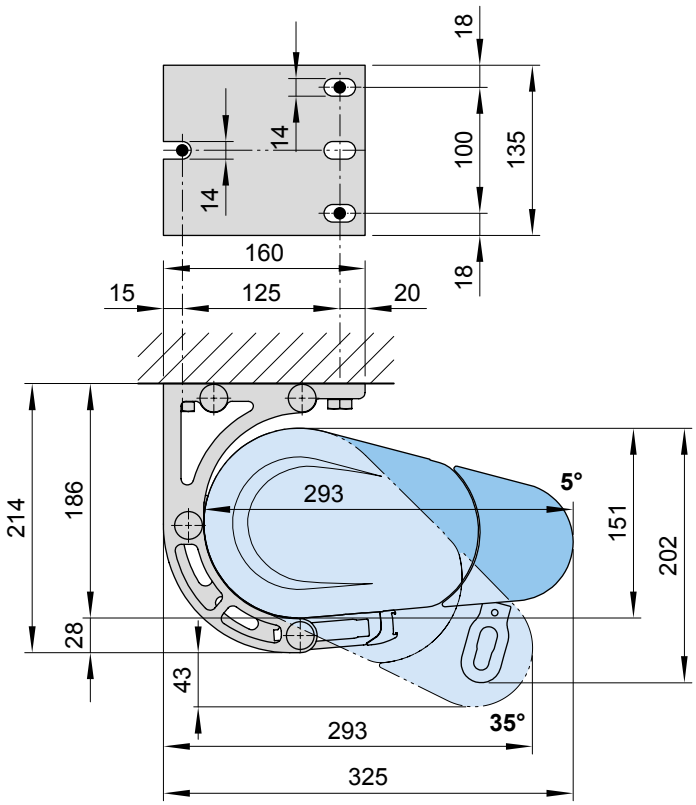

76385. = wall sealing profile (standard width = awning width (**M**); up to a maximum awning pitch of 65°)

dimensions in mm

Face fixture, manual operation, gearbox eye position

Dimensions at a pitch of 5°–35°

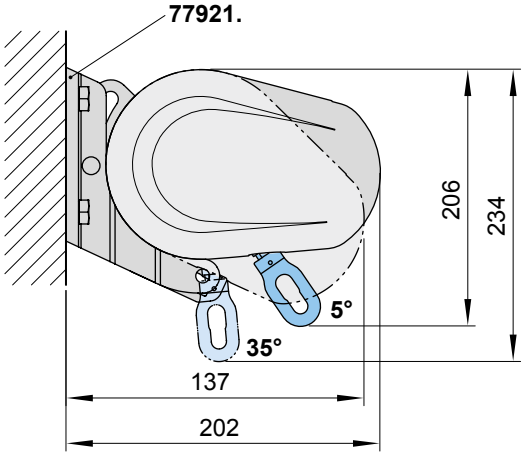

Dimensions at a pitch of 38°–65°

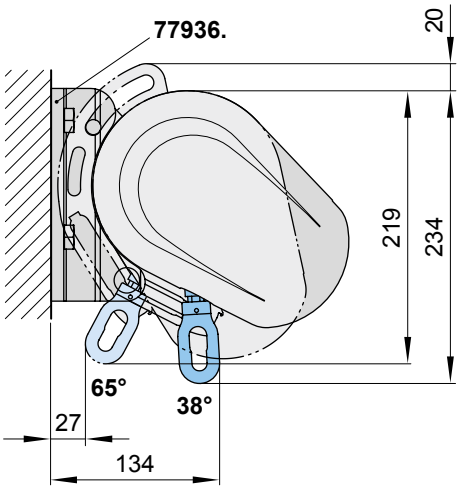

dimensions in mm

Face fixture, motor drive, dimensions at a pitch of 5°–35°

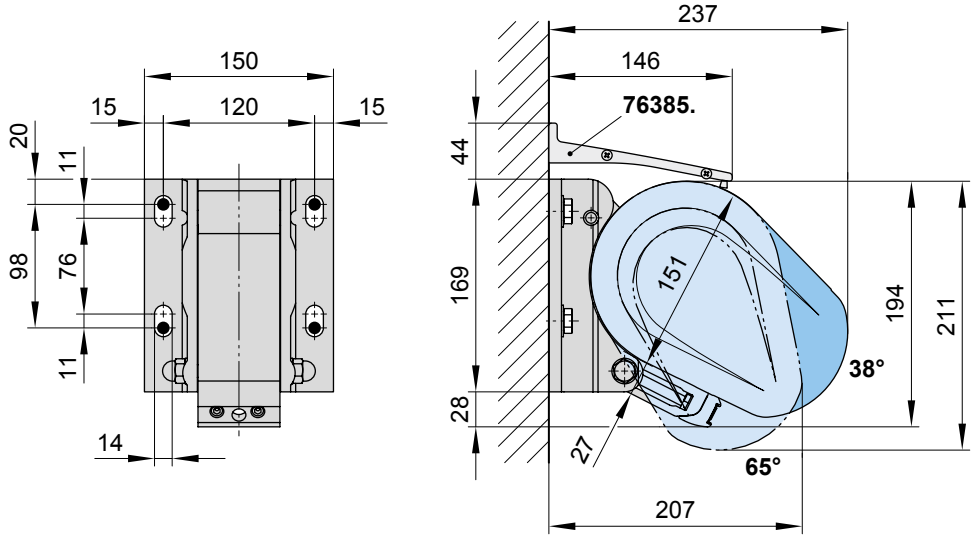

Top fixture, motor drive, dimensions at a pitch of 38°–65°

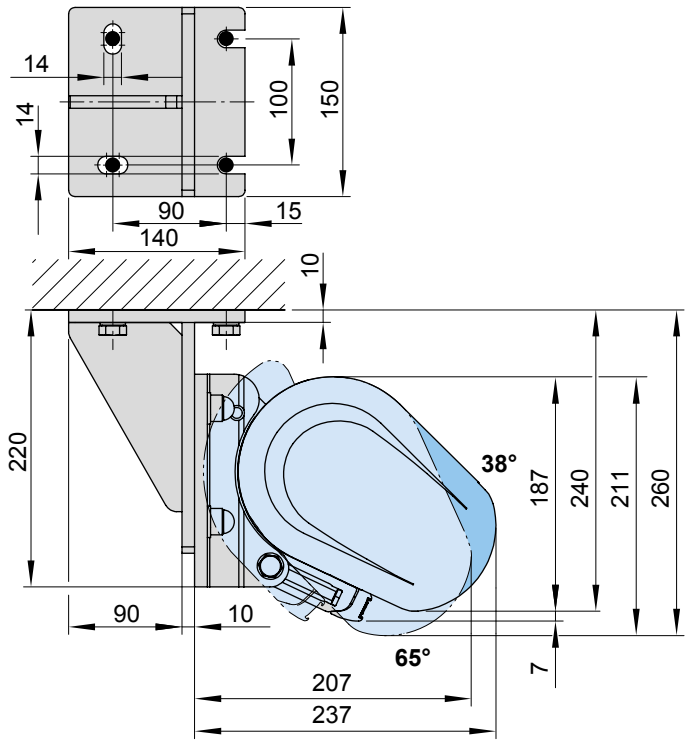

76385. = wall sealing profile (standard width = awning width (**M**); up to a maximum awning pitch of 65°)

dimensions in mm

01 02 03 04 05 06 07 08 09 10 11 12 13 14 15 16 17

Motor cable exit point

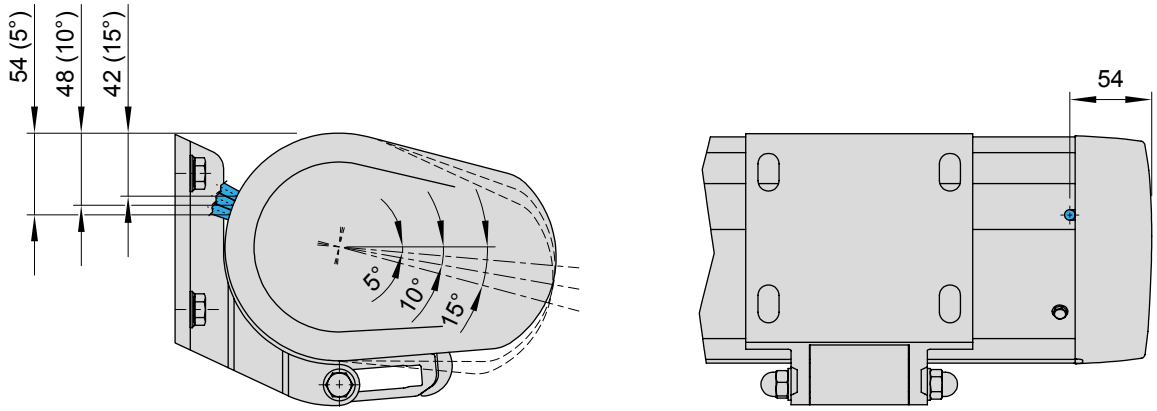

Face fixture, radio-controlled motor with manual override

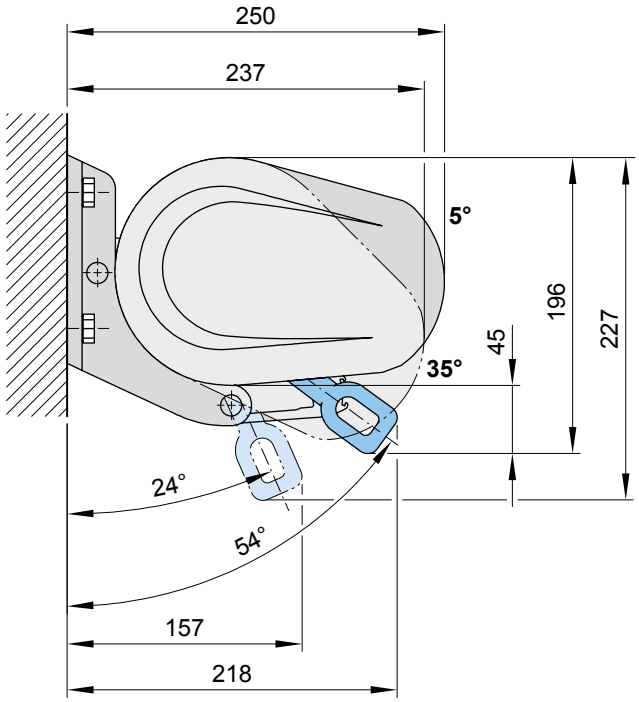

dimensions in mm